Input/Output Systems

An I/O (Input/Output) system **manages the communication between a computer's CPU/memory and external devices, facilitating data transfer via hardware controllers and operating system software**

Key Components of an I/O System:

- **I/O Hardware:** Includes devices e.g., keyboards, monitors.
- **Device Drivers:** Specialized software that acts as an interface between the operating system and specific hardware.Y
- **I/O Software:** Operates in layers (interrupt handlers, device drivers, device-independent software, and user-level software) to provide a uniform, abstracted interface for interacting with diverse hardware

I/O Communication Technique :

- **Programmed I/O(Polling):** CPU continuously checks the device and transfers data itself.
- **Interrupt-Driven I/O:** Device signals the CPU when it is ready for data transfer.
- **DMA (Direct Memory Access):** Data is transferred directly between device and memory without CPU involvement.

Made with GAMMA

Communication between CPU, Memory and I/O Devices:

- **CPU (brain of computer)** controls everything and gives instructions
- **Memory (RAM)** stores data and instructions temporarily

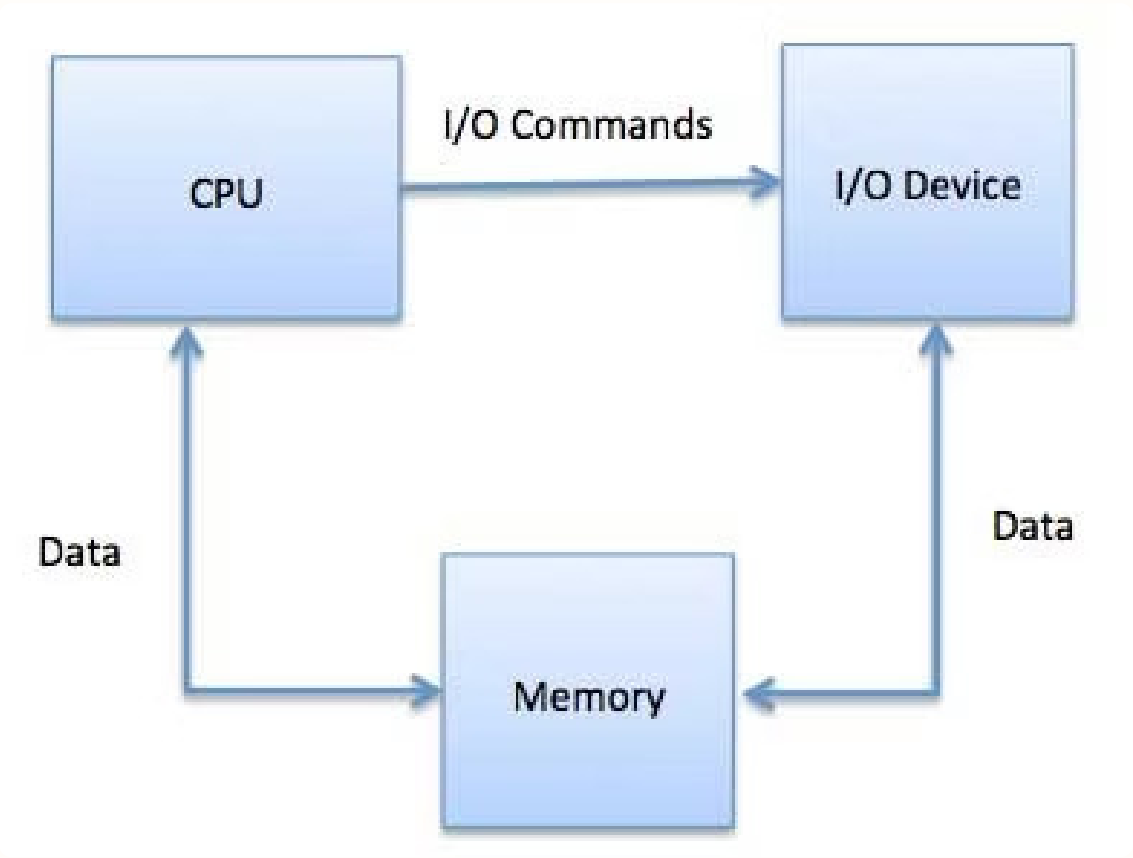

- **I/O devices** (keyboard, mouse, printer) send and receive data

How they Communicate:

- CPU sends request to **input device** to take data (like typing on keyboard)
- Input device sends data to **memory (RAM)**
- CPU takes that data from memory and processes it
- After processing, CPU stores result back in memory
- CPU sends result to **output device** (like monitor or printer)

Made with GAMMA

Introduction to Buses and Data Transfer

What are Buses?

Buses are communication pathways that connect the CPU, memory, and I/O devices. They consist of multiple wires that transmit data, addresses, and control signals simultaneously.

Types of Buses

- Data bus: Transfers actual data between components
- Address bus: Specifies memory or device locations
- Control bus: Manages timing and coordination

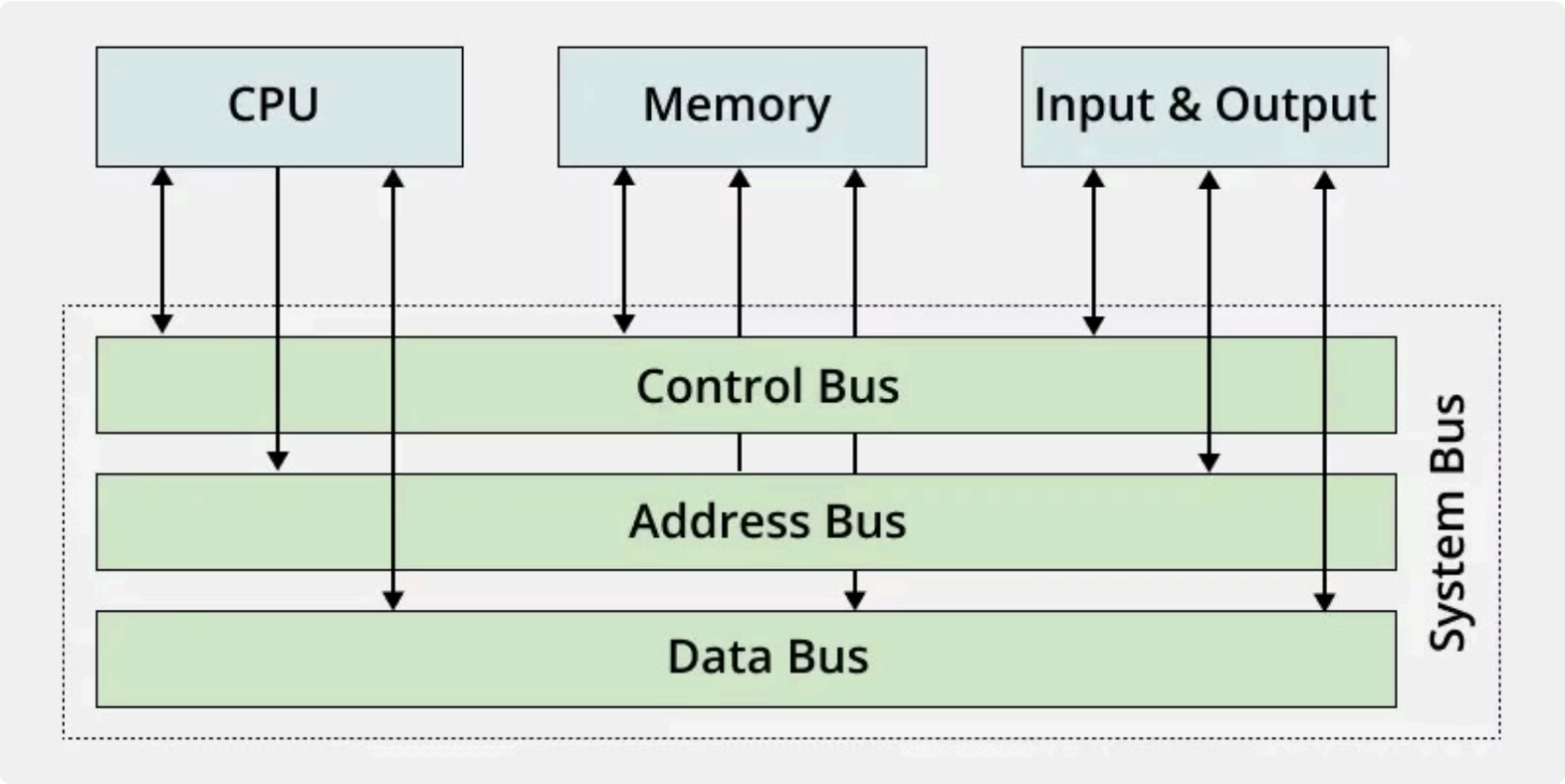

Made with GAMMA

Direct Memory Access (DMA)

- **Direct Memory Access (DMA)** is a technique where data is transferred directly between an I/O device and memory without continuous involvement of the CPU.

These are the operations:

1

Request Phase

The I/O device asks the CPU for permission to transfer data.

2

Transfer Phase

The DMA controller transfers data directly between memory and the device (CPU is free).

3

Completion Phase

After transfer is done, DMA informs the CPU with a signal (interrupt).

Made with GAMMA

I/O Interface Protocols

I/O interface protocols are rules that help a computer communicate with external devices (like keyboard, mouse, pen drive) smoothly.

USB(Universal Serial Bus)

A common and easy way to connect devices like keyboard, mouse, and pen drive to a computer for data transfer and power supply.

Thunderbolt

A high-speed connection technology used to transfer data, video, and power very fast between a computer and devices like monitors and external drives.

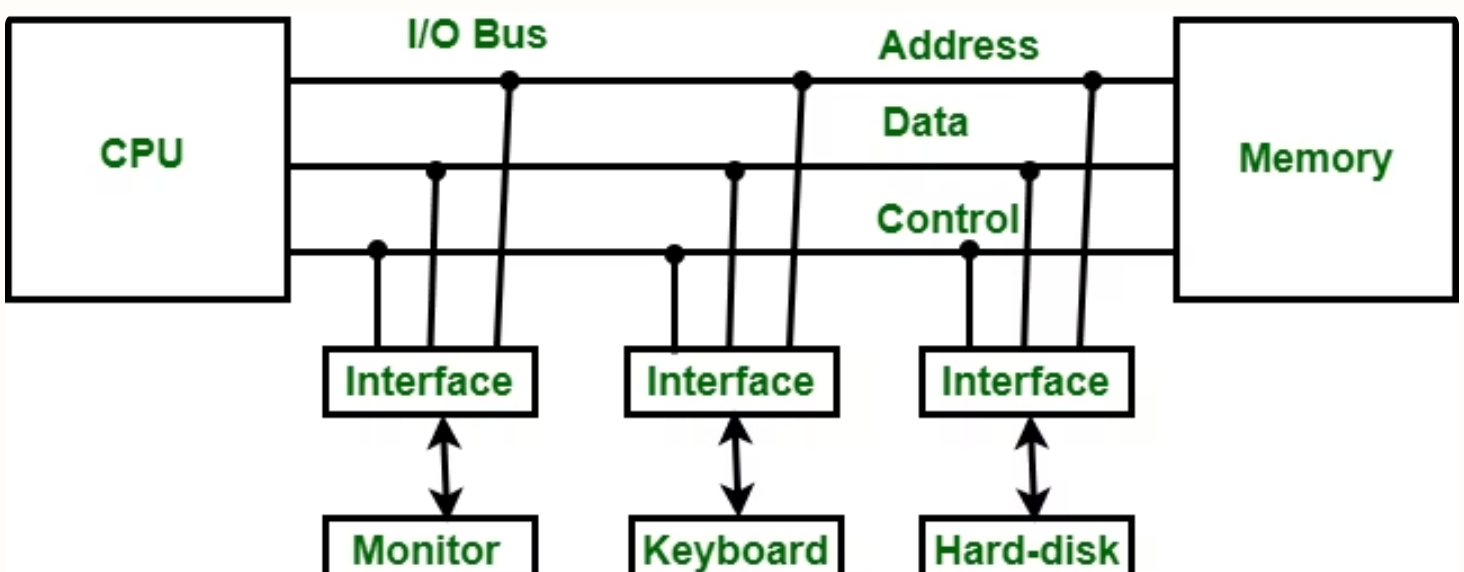

Made with GAMMA

I/O Virtualization Technologies

What is I/O Virtualization?

- **I/O Virtualization** is a technique where one physical I/O device is shared and used by multiple virtual machines as if each has its own device.

Key Techniques

- Device passthrough: Direct assignment of physical devices to VMs
- Virtualized I/O: Software emulation of hardware devices
- Single Root I/O Virtualization (SR-IOV): Hardware-assisted virtualization

Made with GAMMA

Future Trends in I/O Systems

Future trends in I/O systems focus on faster data transfer, lower latency, and smarter technologies like high-speed interfaces and virtualization.

Higher Speeds

Next-generation protocols targeting terabit-per-second transfer rates using advanced encoding and parallel channels.

Intelligent Controllers

On-device processing and AI acceleration reducing CPU overhead and enabling smarter data management.

Made with GAMMA

Introduction to Parallel Computing

Parallel computing means doing **many tasks at the same time** instead of one by one.

Simple Example:

Imagine you have to clean a big house:

- 👩‍🦱 **One person (normal computing):** cleans room by room → slow
- 👨‍👩‍👧‍👦 **Many people (parallel computing):** each cleans one room → fast

✔️ Work gets done much quicker!

How it Works

- Big task is divided into **small parts**
- Each part is given to **different processors/cores**
- All parts run **at the same time**
- Results are combined to get the final output.

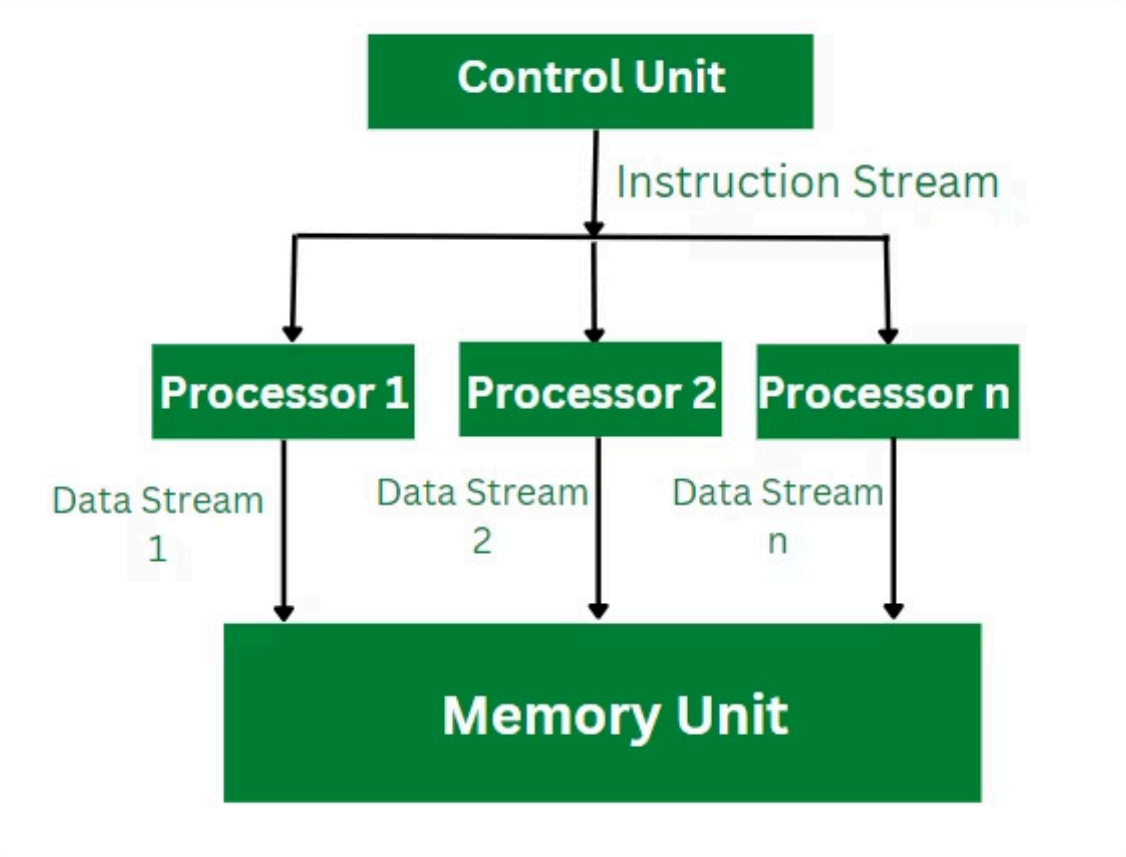

Made with GAMMA

Parallel Architecture Types

SIMD(Single Instructions, Multiple Data)

One instruction is applied to multiple data at the same time (same task on different data).

eg :- Applying the same filter to many images at once

MIMD(Multiple Instruction, Multiple Data)

Different processors perform different instructions on different data at the same time.

eg:-One processor plays music while another downloads a file

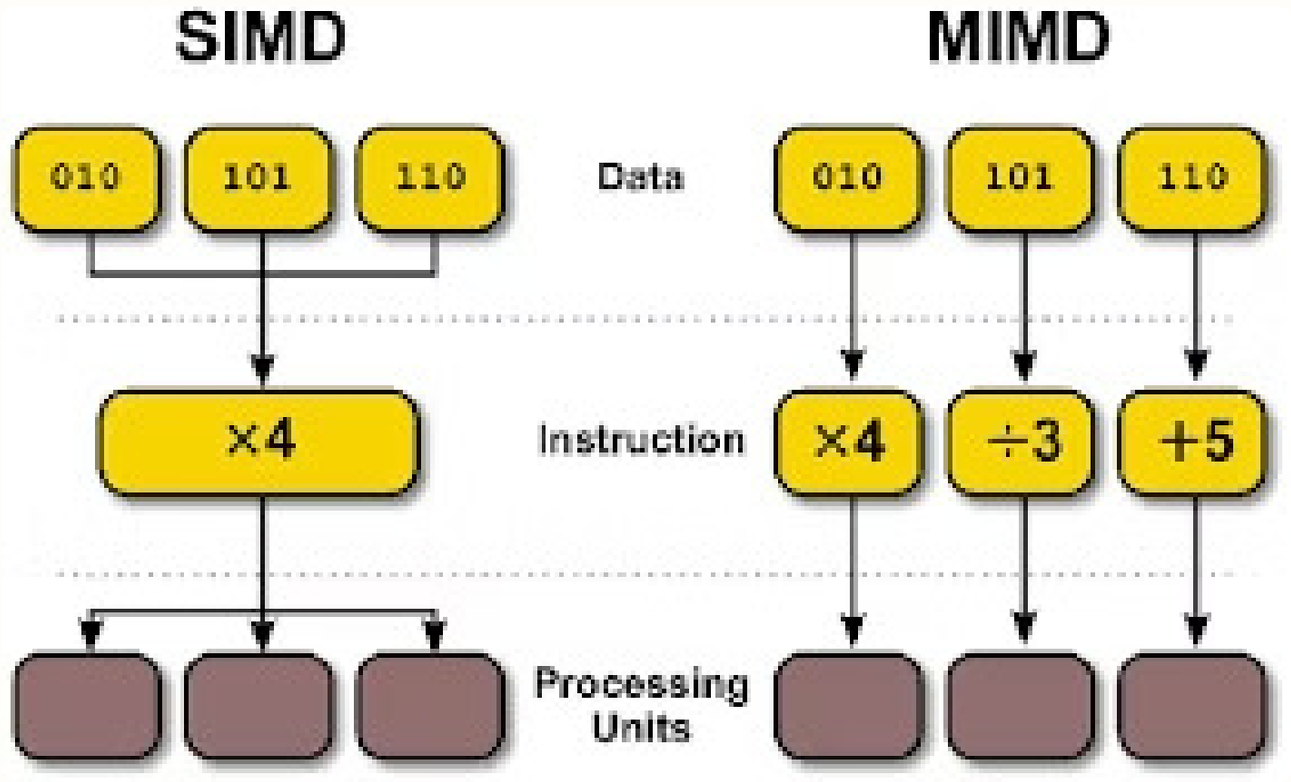

Made with GAMMA

Hardware acceleration through FPGAs and ASICs

- **Hardware acceleration** means using special hardware to do tasks faster than a normal CPU.
- **FPGA (Field Programmable Gate Array):**
  A flexible chip that can be programmed to perform specific tasks quickly (can be changed anytime).
- **ASIC (Application-Specific Integrated Circuit):**
  A fixed chip designed for one specific task, so it works very fast but cannot be changed.

Made with GAMMA